i-PRO

Operating Instructions

Extension Unit

Model No. WJ-HXE400
WJ-HXE400/G

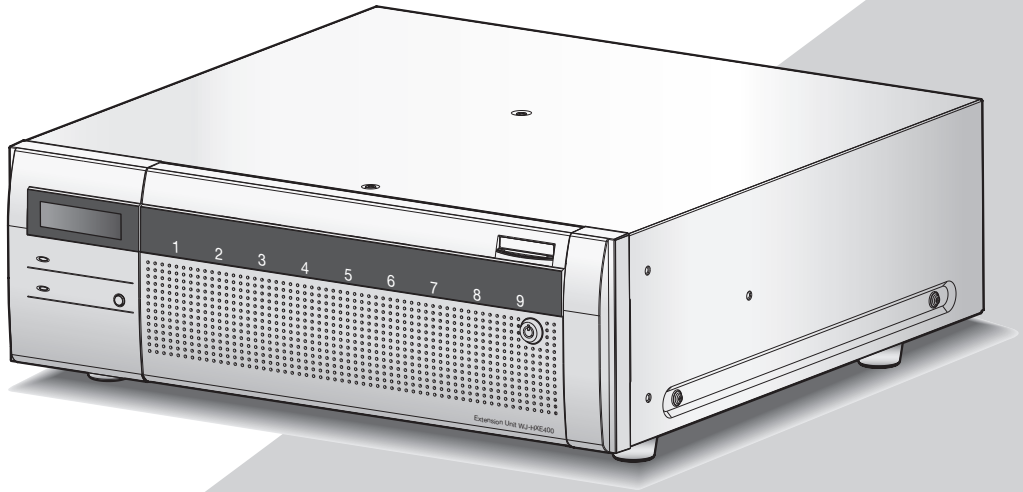

Before attempting to connect or operate this product,
please read these instructions carefully and save this manual for future use.

The model number is abbreviated in some descriptions in this manual.

Safety Information

WARNING:

- This apparatus must be earthed.
- Apparatus shall be connected to a main socket outlet with a protective earthing connection.
- The mains plug or an appliance coupler shall remain readily operable.
- To prevent fire or electric shock hazard, do not expose this apparatus to rain or moisture.
- The apparatus should not be exposed to dripping or splashing and that no objects filled with liquids, such as vases, should be placed on the apparatus.
- All work related to the installation of this product should be made by qualified service personnel or system installers.
- For PERMANENTLY CONNECTED APPARATUS provided neither with an all-pole MAINS SWITCH nor an all-all pole circuit breaker, the installation shall be carried out in accordance with all applicable installation rules.
- The connections should comply with local electrical code.

CAUTION:

Before attempting to connect or operate this product, please read the label on the bottom.

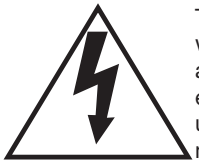

The lightning flash with arrowhead symbol, within an equilateral triangle, is intended to alert the user to the presence of uninsulated "dangerous voltage" within the product's enclosure that may be of sufficient magnitude to constitute a risk of electric shock to persons.

The exclamation point within an equilateral triangle is intended to alert the user to the presence of important operating and maintenance (servicing) instructions in the literature accompanying the appliance.

Power disconnection. Unit with or without ON-OFF switches have power supplied to the unit whenever the power cord is inserted into the power source; however, the unit is operational only when the ON-OFF switch is in the ON position. Unplug the power cord to disconnect the main power for all units.

~ : Alternating current symbol

For Denmark, Finland, Norway, Sweden

In **English**: “The equipment must be connected to an earthed mains socket-outlet”.
In **Danish**: “Apparatets stikprop skal tilsluttes en stikkontakt med jord, som giver forbindelse til stikproppens jord”.
In **Finnish**: “Laite on liitettävä suojakoskettimilla varustettuun pistorasiaan”.
In **Norwegian**: “Apparatet må tilkoples jordet stikkontakt”.
In **Swedish**: “Apparaten skall anslutas till jordat uttag”.

For U.S. and Canada:
WJ-HXE400
For Europe and other countries:
WJ-HXE400/G

UL listed model No.:
WJ-HXE400

For Canada

CAN ICES-3(A)/NMB-3(A)

For U.S.A.

NOTE: This equipment has been tested and found to comply with the limits for a Class A digital device, pursuant to Part 15 of the FCC Rules. These limits are designed to provide reasonable protection against harmful interference when the equipment is operated in a commercial environment. This equipment generates, uses, and can radiate radio frequency energy and, if not installed and used in accordance with the instruction manual, may cause harmful interference to radio communications.
Operation of this equipment in a residential area is likely to cause harmful interference in which case the user will be required to correct the interference at his own expense.

FCC Caution: To assure continued compliance, (example - use only shielded interface cables when connecting to computer or peripheral devices). Any changes or modifications not expressly approved by the party responsible for compliance could void the user's authority to operate this equipment.

For U.S.A.

The model number and serial number of this product may be found on the surface of the unit.
You should note the model number and serial number of this unit in the space provided and retain this book as a permanent record of your purchase to aid identification in the event of theft.

Model No. _____

Serial No. _____

For U.K.

FOR YOUR SAFETY PLEASE READ THE FOLLOWING TEXT CAREFULLY.

This appliance is supplied with a moulded three pin mains plug for your safety and convenience.
A 5 amp fuse is fitted in this plug.
Should the fuse need to be replaced please ensure that the replacement fuse has a rating of 5 amp and that it is approved by ASTA or BSI to BS1362.
Check for the ASTA mark or the BSI mark on the body of the fuse.
If the plug contains a removable fuse cover you must ensure that it is refitted when the fuse is replaced.
If you lose the fuse cover the plug must not be used until a replacement cover is obtained.
A replacement fuse cover can be purchased from our dealer.

IF THE FITTED MOULDED PLUG IS UNSUITABLE FOR THE SOCKET OUTLET IN YOUR HOME THEN THE FUSE SHOULD BE REMOVED AND THE PLUG CUT OFF AND DISPOSED OF SAFELY. THERE IS A DANGER OF SEVERE ELECTRICAL SHOCK IF THE CUT OFF PLUG IS INSERTED INTO ANY 13 AMP SOCKET.

How to replace the fuse

The location of the differs according to the type of AC mains plug (figures A and B).
Confirm the AC mains plug fitted and follow the instructions below. Illustrations may differ from actual AC mains plug.
Open the fuse cover with a screwdriver and replace the fuse and close or attach the fuse cover.

Figure A

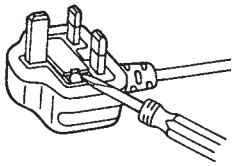

Figure B

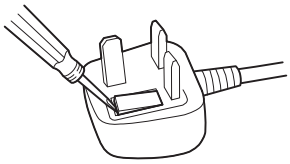

Important safety instructions

1) Read these instructions.

2) Keep these instructions.

3) Heed all warnings.

4) Follow all instructions.

5) Do not use this apparatus near water.

6) Clean only with dry cloth.

7) Do not block any ventilation holes. Install in accordance with the manufacturer's instructions.

8) Do not install near any heat sources such as radiators, heat registers, stoves, or other apparatus (including amplifiers) that produce heat.

9) Do not defeat the safety purpose of the polarized or grounding-type plug. A polarized plug has two blades with one wider than the other. A grounding type plug has two blades and a third grounding prong. The wide blade or the third prong are provided for your safety. If the provided plug does not fit into your outlet, consult an electrician for replacement of the obsolete outlet.

10) Protect the power cord from being walked on or pinched particularly at plugs, convenience receptacles, and the point where they exit from the apparatus.

11) Only use attachments/accessories specified by the manufacturer.

12) Use only with the cart, stand, tripod, bracket, or table specified by the manufacturer, or sold with the apparatus. When a cart is used, use caution when moving the cart/apparatus combination to avoid injury from tip-over.

13) Unplug this apparatus during lightning storms or when unused for long periods of time.

14) Refer all servicing to qualified service personnel. Servicing is required when the apparatus has been damaged in any way, such as power-supply cord or plug is damaged, liquid has been spilled or objects have fallen into the apparatus, the apparatus has been exposed to rain or moisture, does not operate normally, or has been dropped.

Contents

Safety Information **2**
Important safety instructions 4
Introduction **6**
Preface 6
Standard accessories 6
About the user manuals 6
Disclaimer of warranty 7
About HDD Unit 7
Precautions **8**
Precautions for handling 9
Precautions for installation 10
Major operating controls and their functions **11**
Front view 11
Inside the front cover 12
Rear view 13
Installation/operation flows **15**
Installation flow 15
About the operation 15
1 Rack mounting **16**
Installation procedure 16
Position in the Rack 17
2 Connection **18**
3 Turn on the devices **19**
Turn on the power of the extension unit 19
(When turn off the power of the extension unit) 19
4 HDD unit **20**
Handle the HDD units 20
HDD unit holding bracket 20
When you transport the extension unit 21
Assemble HDD unit 22
Install the HDD unit in extension unit 23
Remove the HDD units from extension unit 24
Remove the extension unit from recorder 24
Troubleshooting **25**
Specifications **26**

Introduction

Preface

The WJ-HXE400 is the extension unit for the recorder (WJ-NX400K, WJ-NX300K) which is sold separately.
The unit can be mounted with a maximum of 9 HDD units (hard disk drive installed in a canister).
They can be used as RAID (Redundant Arrays of Inexpensive Disk) to improve fault tolerance of the HDD.
The HDD units are easily mounted and dismounted on the unit by opening the front cover of the unit.
Make sure to connect a corresponding recorder to the unit because the HDD units cannot be set with the unit only.

Standard accessories

Operating Instructions (this book) .....1 pc.
Power cord (WJ-HXE400).....1 pc.
Power cord (WJ-HXE400/G).....2 pcs.
Connection cable (1.5 m {4 feet 11 inches}).....1 pc.
Cable clamp .....2 pcs.
Key.....2 pcs.
Label*.....1 pc.
Rack mounting bracket .....2 pcs.
Rack mounting bracket fixing screw .....6 pcs.
Rack handle .....2 pcs.
Screws for the rack handle .....4 pcs.
Washer.....4 pcs.
HDD canister.....9 pcs.
HDD fixing screw.....54 pcs.
Power cord clamp .....1 pc.

* This label is the same one found on the surface of this product. Keep it in view when installing this product in the rack.

About the user manuals

The manuals specify how to install and connect the extension unit and how to install and remove the HDD units using the configuration with the recorder as an example. Refer to the Operating Instructions of your recorder as well.
"WJ-HXE400" or "HXE400" shown in the instructions and illustrations used in these operating instructions indicate the WJ-HXE400, WJ-HXE400/G.

Disclaimer of warranty

IN NO EVENT SHALL i-PRO Co., Ltd. BE LIABLE TO ANY PARTY OR ANY PERSON, EXCEPT FOR REPLACEMENT OR REASONABLE MAINTENANCE OF THE PRODUCT, FOR THE CASES, INCLUDING BUT NOT LIMITED TO BELOW:

(1) ANY LOSS OR DAMAGE, INCLUDING WITHOUT LIMITATION, DIRECT OR INDIRECT, SPECIAL, CONSEQUENTIAL OR EXEMPLARY, ARISING OUT OF OR RELATING TO THE PRODUCT;
(2) ANY INCONVENIENCE, LOSS, OR DAMAGE CAUSED BY INAPPROPRIATE USE OR NEGLIGENT OPERATION OF THE USER;
(3) ALL MALFUNCTIONS OR TROUBLES FROM UNAUTHORIZED DISASSEMBLE, REPAIR OR MODIFICATION OF THE PRODUCT BY THE USER, REGARDLESS OF THE CAUSE OF THE MALFUNCTION OR TROUBLE;
(4) INCONVENIENCE OR ANY LOSS ARISING WHEN IMAGES ARE NOT DISPLAYED, DUE TO ANY REASON OR CAUSE INCLUDING ANY FAILURE OR PROBLEM OF THE PRODUCT;
(5) ANY PROBLEM, CONSEQUENTIAL INCONVENIENCE, OR LOSS OR DAMAGE, ARISING OUT OF THE SYSTEM COMBINED BY THE DEVICES OF THIRD PARTY;
(6) ANY CLAIM OR ACTION FOR DAMAGES BROUGHT BY ANY PERSON OR ORGANIZATIO AS A PHOTOGRAPHED SUBJECT DUE TO VIOLATION OF PRIVACY CONCERNING A SURVEILLANCE CAMERA'S PICTURE OR SAVED DATA, FOR SOME REASON (INCLUDING USE WHEN USER AUTHENTICATION ON THE AUTHENTICATION SETTING SCREEN IS SET TO OFF), BECOMING PUBLIC OR BEING USED FOR ANY PURPOSE;
(7) LOSS OF REGISTERED DATA CAUSED BY ANY FAILURE (INCLUDING INITIALIZATION OF THE PRODUCT DUE TO FORGOTTEN AUTHENTICATION INFORMATION SUCH AS A USER NAME AND PASSWORD).

About HDD Unit

To install a hard disk drive in the extension unit, it is necessary to assemble an HDD unit (encase the hard disk drive in the HDD canister). The HDD unit is designed to easily install/remove the hard disk drive in/from the extension unit. Contact your dealer about purchasing, installing, and replacing the hard disk drives.

Precautions

Refer installation work to the dealer.
Installation work requires technique and experiences. Failure to observe this may cause fire, electric shock, injury, or damage to the product.
- Be sure to consult the dealer.

Stop the operation immediately when something is wrong with this product.
When smoke goes up from the product or the smell of smoke comes from the product, continued use will result in fire, injury, or damage to the product.
- Turn off the power of this product immediately, and then contact your dealer.

Clean the power plug periodically to keep it dust free.
Dust can cause the insulation to be damaged and cause a fire.
- When cleaning, disconnect the power plug and wipe with a clean dry cloth.

Grounding
The power plug of this product is 2-prong plug equipped with a grounding terminal. Use this product after confirming that grounding is properly installed.
If grounding is not installed properly, it may cause ground leakage or damage the product resulting in electric shock.
- Contact the dealer for details. (The grounding installation cost is not included in the price of this product.)

Connect the power plug firmly.
If the power plug is not connected firmly, it can cause fire, electric shock, etc.
- Do not use the damaged power cord and loose electric outlets.

Hold the power plug to disconnect the power cord.
Do not pull the power cord since it can cause fire, electric shock, etc.

Do not insert any foreign objects.
Do not allow any foreign object or liquid such as water, a metallic part, etc. to enter since it may cause fire or electric shock.
- If it happens, disconnect the power plug from the electric outlet immediately and contact your dealer.

Do not install this product in an unstable location.
Selecting an inappropriate installation surface may cause the product to fall down or topple over, resulting in injury.

Avoid doing anything that can damage the power cord/plug.
Do not damage, modify, forcefully bend, twist, stretch or bundle the power cord, and do not put a heavy thing on the power cord.
Using a damaged power cord can cause electric shock, short circuit, fire, etc.
- Contact your dealer for repair of the power cord and plug.

Do not connect to outlets or wiring device if their ratings are beyond the specified rating.
If the rating goes over the specified rating such by putting many loads on one electric outlet, it can cause generation of heat resulting in fire.

Do not engage in work related to the installation and wiring during the power is on.
Failure to observe this may cause fire or electric shock.

Do not strike or give a strong shock to this product
Failure to observe this may cause fire or electric shock.

Avoid placing this product in locations which are subject to humidity and dust.
Failure to observe this may cause fire or electric shock.

Do not disassemble nor alter this product.
Failure to observe this may cause fire or electric shock.
- Ask your dealer for inspection and repair.

Avoid placing receptacles that contain liquids such as water on/near this product.
If liquid spills onto this product, it may cause fire or an electric shock.
- If it happens, disconnect the power plug from the electric outlet immediately and contact your dealer.

Do not touch this product, power cord and connected cables when thunder is heard.
Failure to observe this may cause electric shock.

Do not connect/disconnect the power plug with wet hands.
Failure to observe this may cause electric shock.

Do not block the ventilation holes.
Doing so can cause fire since it can raise the temperature inside this product high.

Precautions for handling

Precautions for use

Power source
The input power source for this product is 120 V AC 60 Hz (WJ-HXE400), 220 V - 240 V AC 50 Hz/ 60 Hz (WJ-HXE400/G). Do not connect to the outlet that provides the power to equipment that requires a measurable amount of power (such as a copy machine, air conditioner, etc.). Avoid placing this product in locations where is subject to water.
* The provided power cord(s) is (are) dedicated to the use with this product. Do not use with any other device. Also, do not use any other power cord with this product.

Ambient operating temperature
Use this product at temperatures between +5 °C to +45 °C {41 °F to 113 °F}. Failure to do so may damage the internal parts or cause malfunction.
* Performance and lifetime of hard disk drives are easily affected by heat (used at high temperature). It is recommended to use this product at a temperature of approx. +25 °C {77 °F}.

POWER switch
The POWER switch is located at the rear of this product. Even though the POWER switch is set to "OFF", the power supply will not be cut. To cut the power supply, remove the power plug of this product from the AC outlet.

About HDD of the HDD unit
- Hard disk drives are precision devices. Handle them with care. It is possible to damage them if they are moved while their motors are still running.
- Please be forewarned that any loss of information on the HDD is not guaranteed under any circumstances.
- Do not move or install this product just after turning the power on or off (for around 30 seconds.) The hard disk drives are running.
- The HDD is consumable and the lifetime differs depending on the operational environment. Write errors may occur frequently after around 20,000 hours of each HDD operation and head and motor deterioration may occur after around 30,000 hour of operation. They will reach the end of their lifetime after 30,000 hours of operation if they have been used at the recommended ambient temperature (approx. +25 °C {77 °F}).
- To prevent data loss from disk crashes, it is recommended to keep the ambient operating temperature at approx. +25 °C {77 °F} and to replace them after around 18000 hours of operation.
  You can check the operating time of each HDD in "Operation" of the "HDD information" tab under "Maintenance" under "Advanced" from the setup menu.
- When hard disk drive trouble occurs, replace it immediately. Contact your dealer about servicing.

Prevent condensation from forming
If this happens, it can cause malfunction.
Leave it switched off for around 2 hours in the following cases.
- When this product is placed in an extremely humid place.
- When this product is placed in a room where a heater has just been turned on.
- When this product is moved from an air-conditioned room to a humid and high-temperature room.

Cleaning
- Turn the power off, and then use a soft cloth to clean this product.
- Do not use strong or abrasive detergents when cleaning the body.
- When using a chemical cloth for cleaning, read the caution provided with the chemical cloth product.

Product disposal/transfer
Images saved on the storage device used with this product may lead to personal information leakage. When it is necessary to dispose or give this product to someone, even when for repair, make sure that there is no data on the hard disk drives.

Indication label
Refer to the indication label placed on the surface of this product for the equipment classification and power source, etc.

About reboot of this product
In the following cases, this product will automatically reboot to continue recording.
- When the software of this product has detected the internal error and reboot becomes necessary.

Disclaimer of warranty on recoded data
i-PRO Co., Ltd. assumes no responsibility or liability, directly or indirectly, for failure of recording or editing including loss of data due to any reason or cause which does not exclude repair or maintenance of this product regardless whether the subject is hard disk or other parts.

Packing box, Cushion, HDD unit holding bracket
When transporting the extension unit, it is necessary the Packing case, Cushion and HDD unit holding bracket to prevent the extension unit from damage by fall or vibration. Keep them properly to use again.

About transportation
The extension unit weighs over 10 kg {22.1 lbs}. Be careful not to drop the product when transporting. Dropping may cause damage, deformation of the extension unit, or injury.

Precautions for installation

This product is designed to be used indoors.

i-PRO Co., Ltd. assumes no responsibility for injuries or property damage resulting from failures arising out of improper installation or operation inconsistent with this documentation.

Do not place this product in the following places:

- Locations exposed to direct sunlight
- Locations subject to having strong vibration or impact
- Locations near magnetic field sources such as a television or speakers
- Locations near the devices that emit large sound and generate vibration by sound pressure
- Locations where condensation forms easily, where temperature changes greatly or where humidity level is high
- Locations subject to steam and oil smoke such as a kitchen
- Locations which are not level
- Locations subject to dust
- Locations where it may get wet from rain or water splash

Do not install this product in locations where the product or the cables can be destroyed or damaged by persons with malicious intent.

Place this product horizontally on a level surface.
Do not place this product in an upright position. When stacking multiple extension units, clear a space of more than 5 cm {2 inches} from both sides, the top, the bottom and the rear of the extension unit.

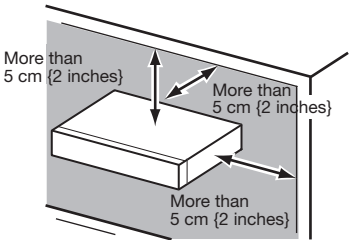

Heat dissipation
To prevent this product from overheating, heed the following. Failure to observe this may cause fire or trouble.

- Do not block the cooling fan outlet or the ventilation holes with a wall, rack, cloth, etc. Maintain the product periodically to prevent dust from blocking ventilation holes.
- The lifetime of the cooling fan is limited by use. It is recommended to replace them after around 30000 hours of operation. Contact your dealer for replacement of the cooling fans.
- Clear a space of more than 5 cm {2 inches} from both sides, the top, and the rear of the product. Do not block the ventilation holes on the front side since this product is designed to cool the hard disk drives by drawing in air from the front.

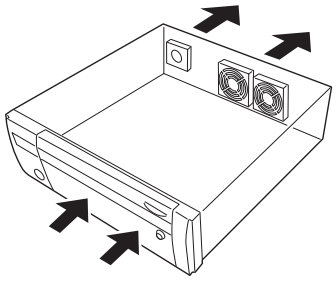

Avoid placing this product near noise sources
If the cables are placed near noise sources such as fluorescent lamps, noises may be produced. In this case, rewire avoiding the noise sources, or move the product to a place far from the source.

Grounding
Confirm that the wire is connected from the SIGNAL GND terminal to earth ground.
A grounding connection must be made before connecting the power plug or this product to the main power supply.
When disconnecting the grounding wire, make sure that the power plug of this product is disconnected from the main power supply.

Avoid placing receptacles that contain liquids such as water near this product.
If liquid spills onto this product, it may cause fire or an electric shock.

Shielded (STP) LAN cables must be used with this unit to ensure compliance with EMC standards.

About sulfuration of rubber products
Do not leave rubber products containing sulfur (packing and rubber feet) close to the extension unit or in the same storing box. Sulfur constituent from the rubber products may cause sulfuration corrosion on electrical parts or terminals and defects in the extension unit.

Major operating controls and their functions

Front view

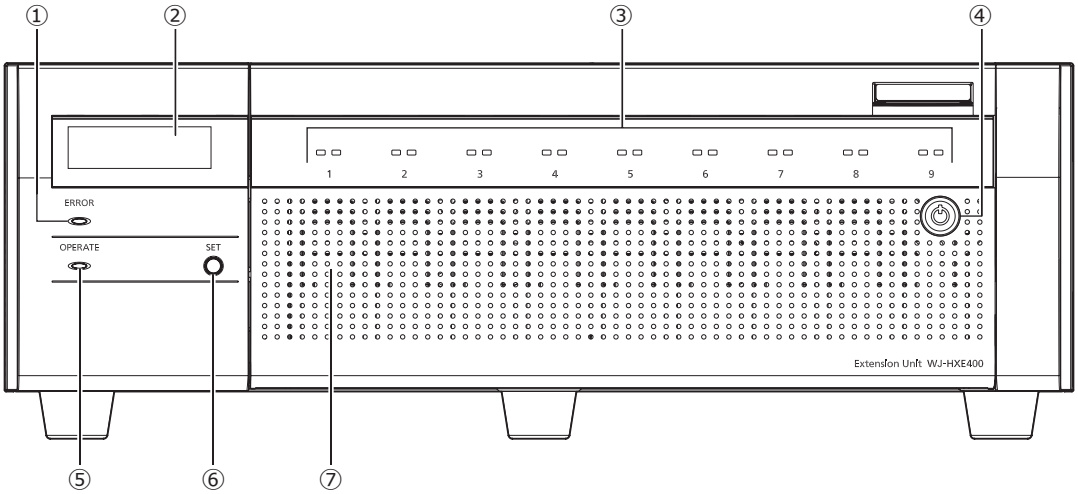

① **Error indicator [ERROR]**
Blinks when an error that can become a problem for the extension unit to run the system occurs.
Blinks red: System error (Network link error, HDD error, Recording error, etc.)
Blinks orange: Thermal error, cooling fan malfunction, etc.
Shows a solid light when automatically reset from an error status.

② **LCD**
Displays temperature and operation mode of the extension unit. The extension unit requires the recorder for settings. You cannot setup the settings using the LCD of the recorder only.

③ **HDD access indicator (1~9)**
It transmits the HDD status indicator and the HDD access indicator installed in the front cover.
HDD status indicator (left side)
Indicates the operational status of the respective hard disk drive. (☞ Page 12)
HDD access indicator (right side)
Indicates the status (access/failure) of the respective hard disk drive. (☞ Page 12)
Basically, each indicator will indicate the status of the respective HDD units (HDD unit 1 to 9), but each indicator will be the same when the system error occurs.

Important:
- When the indicator lights red in the RAID1/RAID5/RAID6 mode, replace the HDD unit with the error immediately. Contact your dealer about replacing the HDD unit.
- In the RAID5 mode:
  When 2 or more HDD access indicators light/blink red, it may be impossible to recover data on the respective hard disk drives.
- In the RAID6 mode:
  When 3 or more HDD access indicators light/blink red, it may be impossible to recover data on the respective hard disk drives.

④ **Key hole**
Use the provided key to open/close the front cover.
Keep the key in a safe place.
Lock the front cover: Insert, push and turn the key to the left.
Unlock the front cover: Insert, push and turn the key to the right.

⑤ **Operation indicator [OPERATE]**
Lights when the power is on.

⑥ **Set button [Set]**
Use this button to initialize the settings of the unit (default) in the following directions.
①Turn on the unit while pressing the set button.
②Press the set button again to initialize the settings after "INITIALIZE ACCEPT [SET]" is displayed on the LCD.
* If the unit is not initialized , turn off the power without pressing the set button.
③When "INITIALIZE DONE!" is displayed on the LCD, the initialization is completed.

Important:
- When the unit is initialized, the data on the HDD cannot be read out. Contact your dealer when you initialize the unit.

⑦ **Front cover**
Open the front cover when adding/replacing the HDD unit.
Keep this cover closed and locked during normal operation.

Inside the front cover

* The following illustration shows that 9 HDD units are installed with the "HDD unit holding brackets" removed.

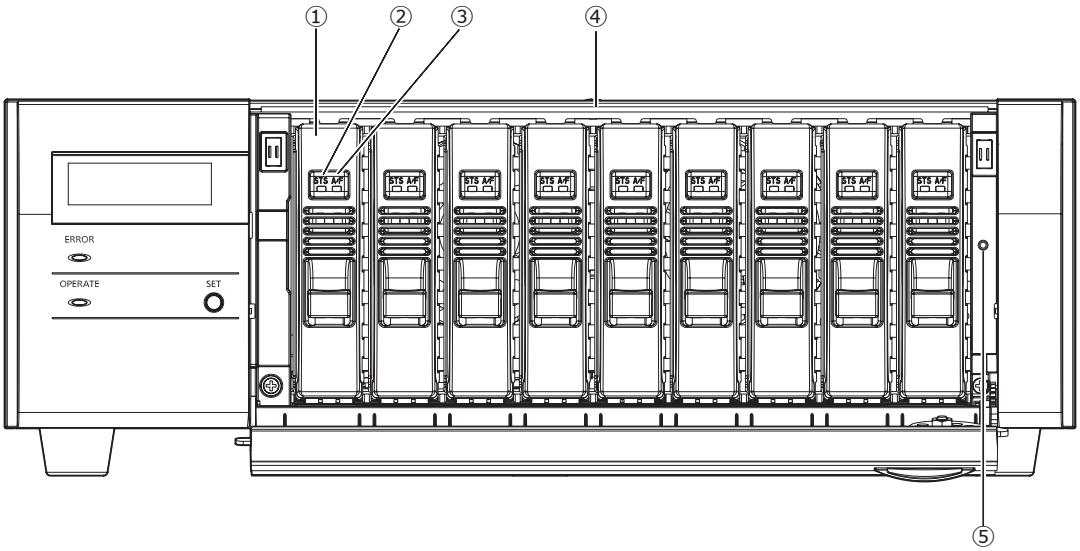

① **HDD units [Option]**
Only the hard disk drive encased in the dedicated hard disk drive canister (HDD units) can be installed in the extension unit.
Contact your dealer about purchasing, installing, and replacing the hard disk drives.

② **HDD status indicator [STS]**
Indicates the operational status of the respective hard disk drive.
Lights green: Indicates that the power of the (formatted) hard disk is on
Blinks green: Indicates that the respective hard disk drive is for playback use only.
(Recording is unavailable using the respective hard disk drive.)
Blinks orange: Indicates that the respective hard disk drive is currently being formatted or during the recognition process.
Blinks red: Indicates that formatting of the hard disk drive has failed
Off: Indicates that the power of the hard disk drive is off, Indicates that the hard disk drive is not connected/recognized.

③ **HDD access/failure indicator (A/F)**
Indicates the status (access/failure) of the respective hard disk drive.
When an HDD failure (error) occurs during operation in the RAID1/RAID5/RAID6 mode, the indicator will light/blink red.
Blinks green: Indicates that the respective hard disk drive is being accessed.
Off: Indicates that the respective hard disk drive is not being accessed.
Lights red: Indicates that the respective hard disk drive is faulty (which can be recovered by replacing the hard disk drive)
In the RAID1/RAID5 mode, it indicates that the respective hard disk drive is the first faulty drive.
In the RAID6 mode, it indicates that the respective hard disk drives are the first and second faulty drive.
Blinks red: Indicates that the respective hard disk drive is faulty (which cannot be recovered even by replacing the hard disk drive)
In the RAID5 mode, it indicates that the respective hard disk drive is the second faulty drive.
In the RAID6 mode, it indicates that the respective hard disk drive is the third faulty drive.
Blinks orange: Indicates the drive in data recovery in RAID1/RAID5/RAID6 mode (it may appear that the indicator lights orange when recovery is being processed at high speed)

④ **HDD slots**
Up to 9 HDD units can be installed.

⑤ **HDD unit holding bracket fixing thread hole**
Use this hole to fix the HDD unit holding bracket when transporting the extension unit.

Rear view

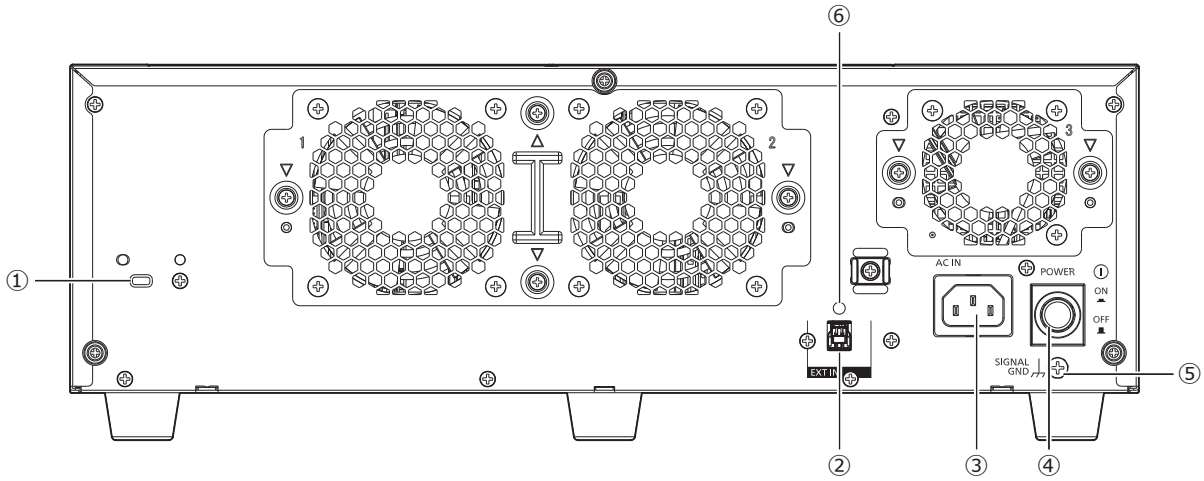

① **Security wire hole**
Mount the lock device for the anti-theft security wire.

② **External input connector (EXT IN)**
Use this connector to connect to the recorder using the provided connection cable.

③ **Power cord inlet [AC IN]**
Connect the provided power cord to this inlet. The power plug of the extension unit is 2-prong plug equipped with a grounding terminal.

④ **[POWER] switch**
Press it to turn on the power. Press it again to turn off the power.

Important:
- Turn on the power of all extension units, and then turn on the power of the recorder.
- Turn off the power of the recorder first when turning off the power.

⑤ **SIGNAL GND terminal [SIGNAL GND]**
Connect this terminal with the SIGNAL GND terminals of the devices in the system for signal ground. When operating the extension unit and the devices in the system without signal ground, noise may be produced.

⑥ **Cable clamp fixing hole**
Attach the provided cable clamp to fix the connection cable.

How to use the power cord clamp

Fix the power cord firmly at 15 cm to 20 cm {5-7/8 to 7-7/8 inches} from the plug with the provided power cord clamp to prevent the cable from unplugging.

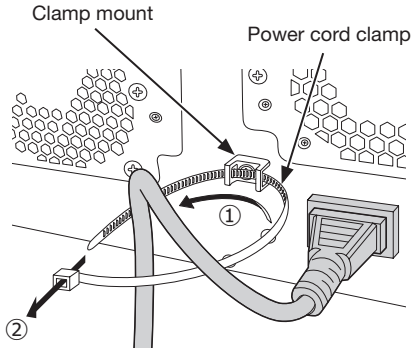

①Pass the power cord clamp through the clamp mount.
②Make a ring with the power cord clamp as shown in the illustration to tighten the power cord.

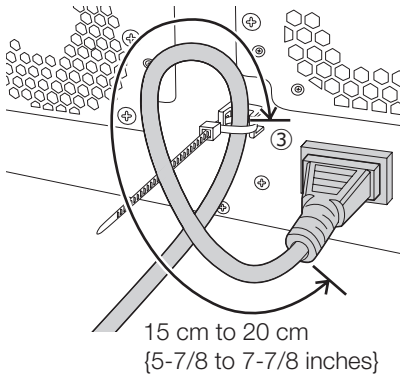

③Tighten the power cord at 15 cm to 20 cm {5-7/8 to 7-7/8 inches} from the connector and fix it to the clamp mount.
Cut the unnecessary part of the power cord clamp as necessary.

Cable clamp

Fix the connection cable using the provided cable clamp as follows.

Step 1

Attach the cable clamp fixing belt to the fixing hole on the rear, and attach the holder part of the cable clamp behind the connector end of the connection cable.
Pull the cable clamp fixing belt to confirm that the fixing belt is not pulled out from the rear of the extension unit.

Note:
- For WJ-NX400K/G model, since the ferrite core is equipped on the cable, attach the holder part between the ferrite core and connector end.

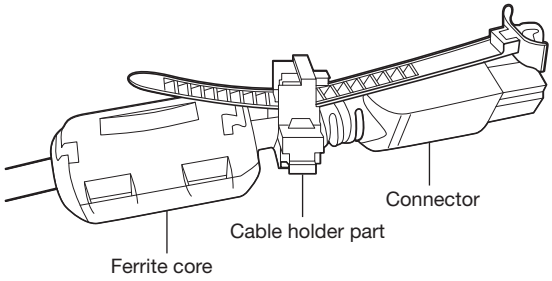

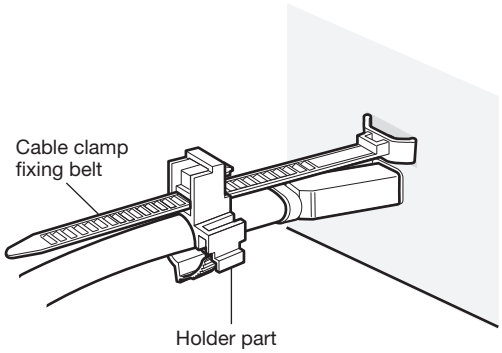

Step 2

Close the clamp.

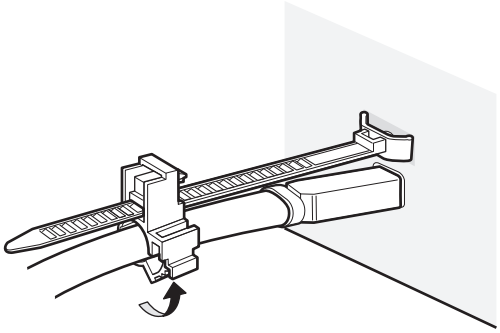

Step 3

Slide the cable clamp toward the connector end of the connection cable, and then hold the connector end of the connection cable.
Make sure that the connection cable is connected firmly.

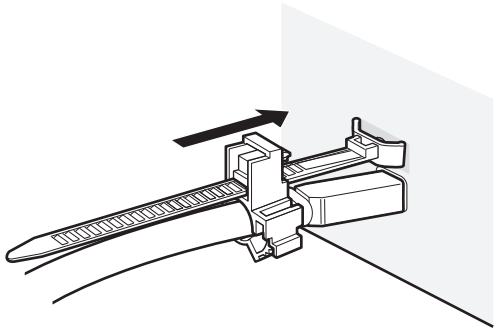

Note:
- Overhead view

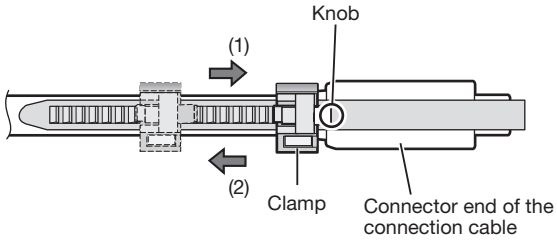

- Hold the connector end of the connection cable by sliding the holder part in the direction of arrow indication (1). If the holder part is not slide all the way to the connector end side, the cable may come out.
- To slide the holder part in the direction of arrow (2), slide it while keeping the knob pulled down.

Installation/operation flows

Installation flow

The installation flow of the extension unit is as follows.

1 **Rack mounting**
☞ **Page 16**

Install the extension unit in the rack.
Go to step **2** when not installing it in the rack.

↓

2 **Connection**
☞ **Page 18**

Connect the extension unit to the recorder.

↓

3 **Turn on the devices**
☞ **Page 19**

Turn on the power of the extension unit.
Turn on the power of the extension unit before turning on the power of the recorder.

↓

4 **HDD unit**
(Install the HDD units)
☞ **Page 23**

Install the HDD units through the HDD insertion slot on the front cover of the unit.

About the operation

The extension unit requires the recorder to set the operational mode of the HDD units or format them. Perform the setting using the connected recorder.
Refer to the Operating Instructions of a corresponding recorder for further information.

1 Rack mounting

Install the extension unit in an EIA standard 19-inch rack (Depth: 550 mm or more).

Note:
- Use four M5 × 12 screws (locally procured) to install the extension unit in a rack.
- The illustration on this page is schematic. Details of the shape are omitted.

Installation procedure

Step 1

Remove the five rubber feet from the bottom of the extension unit using a flathead screwdriver.
Use a screwdriver to remove the screws holding the rubber feet.

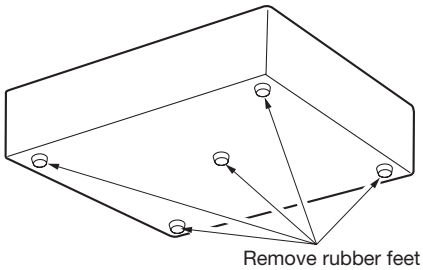

Step 2

Attach the rack handles (provided) to the rack mounting brackets (provided).
Fix them using the screws (provided) (x4) and the washers (provided) (x4) for the rack handle.
Tightening torque: 2.0 N·m ~ 2.4 N·m (1.48 lbf·ft ~ 1.78 lbf·ft)

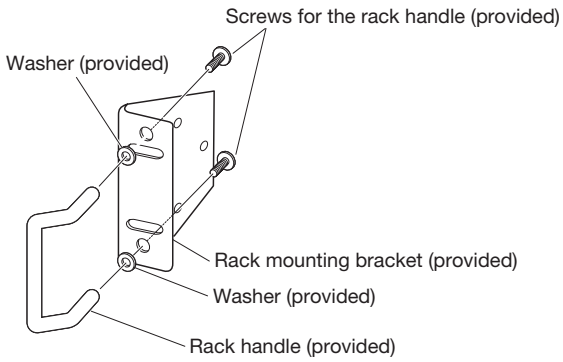

Note:
- The rack mounting bracket (provided) has two types of fitting holes to adjust the protrusion of the front rack. Use either of them depending on the installation conditions.

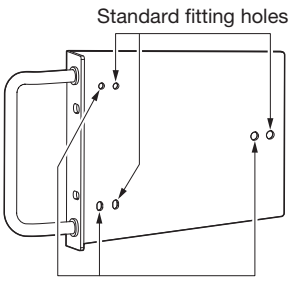

Step 3

Place the provided rack mounting brackets (provided) on both sides of the extension unit and fix them with the rack mounting bracket fixing screw (provided) (x6).
Secure them using the rack mounting bracket fixing screw (provided) (x6).
Tightening torque: 0.88 N·m ~ 1.08 N·m (0.65 lbf·ft ~ 0.80 lbf·ft)

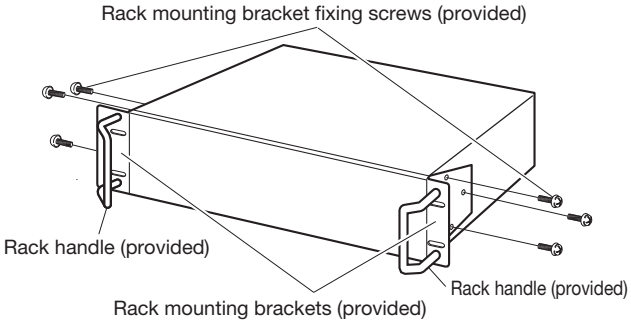

Step 4

Install the extension unit in the rack by using four rack mounting screws.
Secure using the rack mounting screws (x4).
Tightening torque: 2.0 N·m ~ 2.4 N·m (1.48 lbf·ft ~ 1.78 lbf·ft)

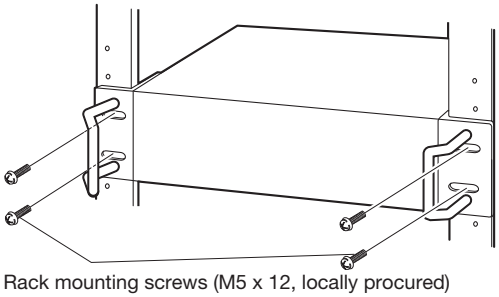

Important:
- When installing the extension unit in the rack, make a space of 1U (44 mm {1-23/32 inches}) above and below the extension unit for ventilation.
- Keep the temperature in the rack below +45 °C {113 °F}.
- It is recommended to install cooling fans or equivalents to keep the temperature in the rack below +30 °C {86 °F}.
- Do not block the ventilation holes or slots to prevent the extension unit from overheating.
- The extension unit weighs over 10 kg {22.1 lbs}. Be careful not to drop the extension unit when installing it into a rack. Dropping may cause damage, deformation of the extension unit, or injury.

Position in the Rack

This is an example where the recorder (WJ-NX400K) and extension unit (max 5 units) are installed in the rack.
Connect the recorder and the extension unit using the connection cable (1.5 m {4 feet 11 inches}) provided with the unit.
(☞ Page 18)

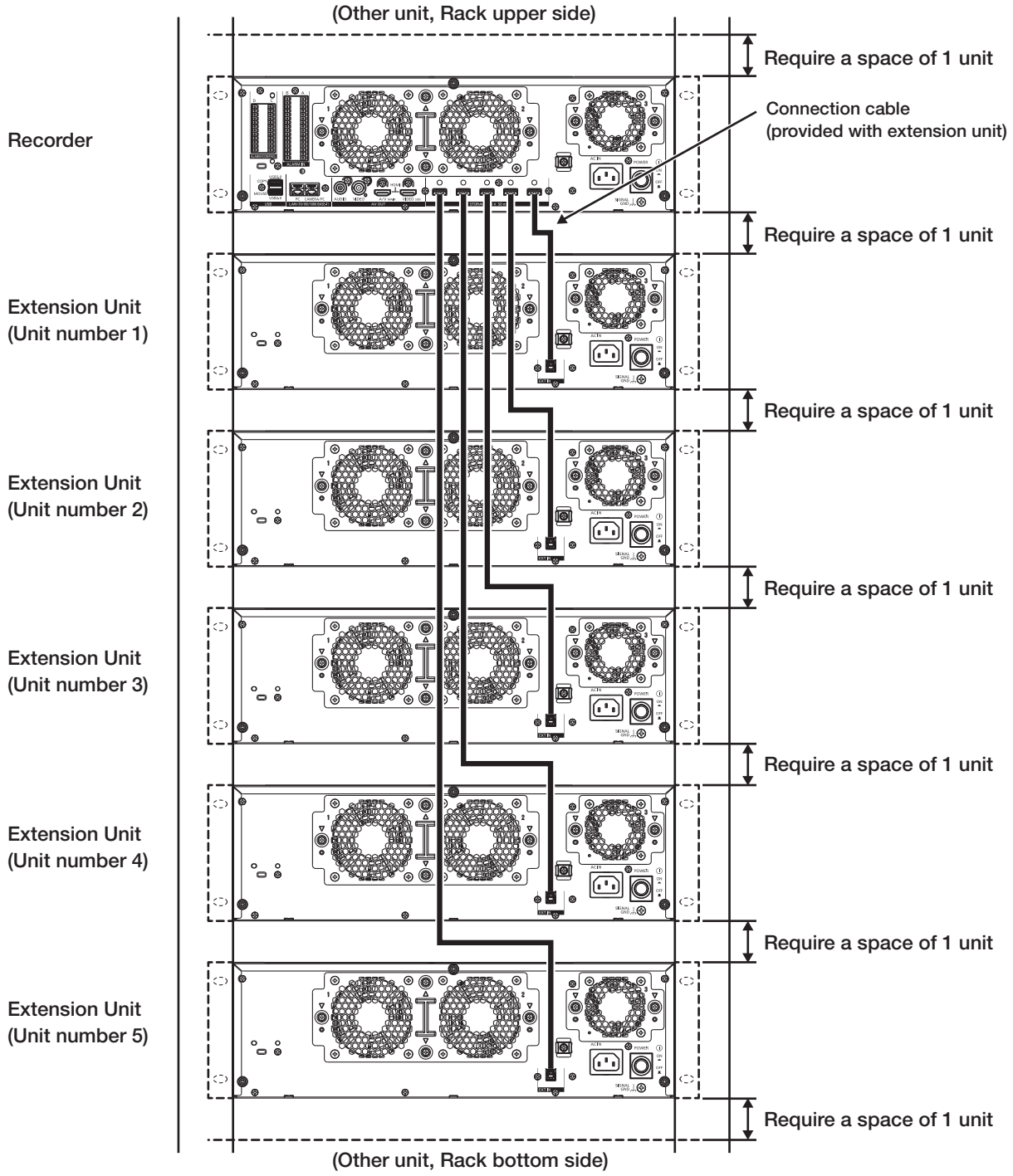

Note:

- When installing the extension unit in the rack, leave a space of 1U (44 mm {1-23/32 inches}) above and below the extension unit for ventilation.
- The unit number is the same as the external storage connector number of the recorder.

2 Connection

A separately sold recorder can be mounted with a maximum of 5 units. Connect the extension unit and the recorder using the provided connection cable. Fix the connection cable with the provided cable clamp so that it does not come off when installing the unit.

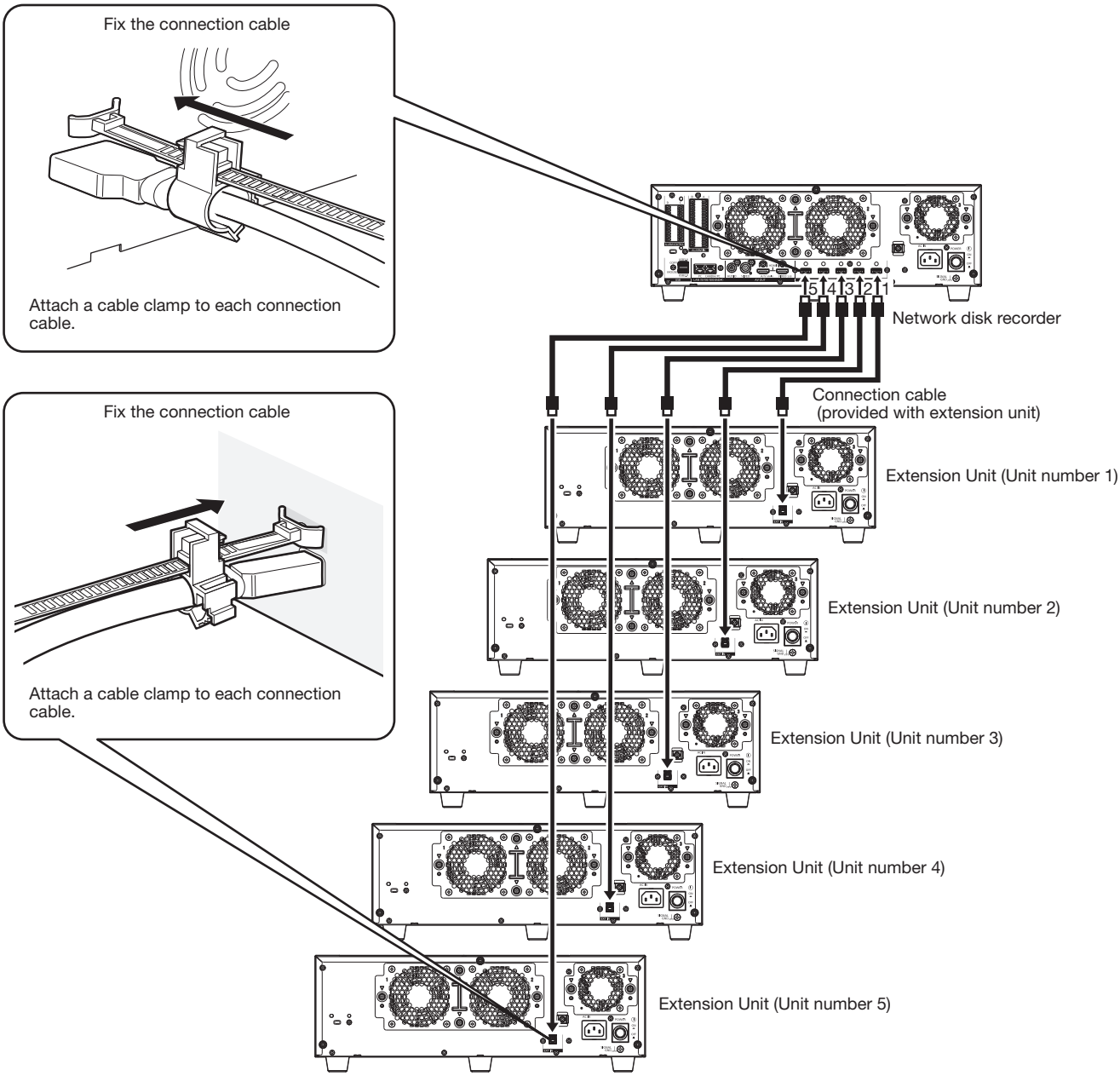

Important:

- Use only the connection cable provided with the extension unit when connecting the extension unit and the network disk recorder.
- Fix the connection cable firmly using the cable clamp provided with the extension unit (☞ Page 14). When the cable is not connected firmly or when it is disconnected, the system may become unstable or recording may fail.
- Do not wind the cable in a coil.

3 Turn on the devices

Turn on the power of the extension unit

Important:
- Connect the provided power source cords to all the extension units and turn them on before turning on the recorder.

Step 1

Connect the provided power cord to the power cord inlet on the rear panel of the extension unit, and insert the power plug to an outlet whose rating is as follows.
WJ-HXE400: 120 V AC, 60 Hz
WJ-HXE400/G: 220 V - 240 V AC, 50 Hz/60 Hz

Important:
- Insert the power cord fully into the power supply terminal so that it will not loosen or come out.
- Fix the power cord firmly at 15 cm to 20 cm {5-7/8 to 7-7/8 inches} from the plug with the provided power cord clamp to prevent the cable from unplugging.

How to use the power cord clamp

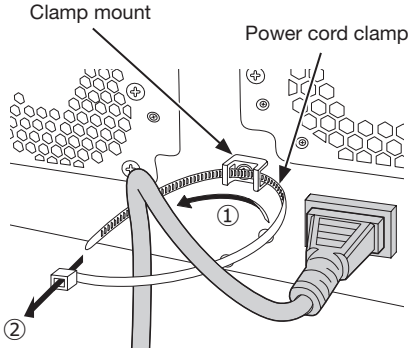

①Pass the power cord clamp through the clamp mount.
②Make a ring with the power cord clamp as shown in the illustration to tighten the power cord.

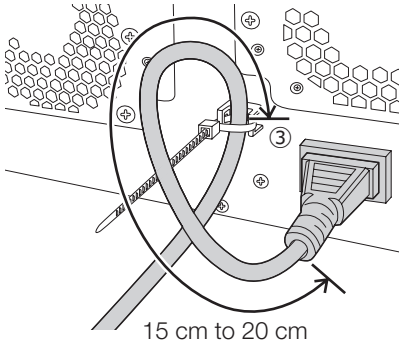

15 cm to 20 cm
{5-7/8 to 7-7/8 inches}

③Tighten the power cord at 15 cm to 20 cm {5-7/8 to 7-7/8 inches} from the connector and fix it to the clamp mount. Cut the unnecessary part of the power cord clamp as necessary.

Step 2

Press the POWER switch on the rear of the extension unit to turn on the power.
- The OPERATE indicator will light and the system check (checking the system and hard disk drives) will start.
- The "WJ-HXE400 Initializing" indication will be displayed on the LCD at startup.
- When the system check is complete, the operational mode and temperature will be displayed on the LCD.

(When turn off the power of the extension unit)

Follow the procedure below to turn off the power.
If multiple extension units are connected, turn off them in an arbitrary order.

Step 1

Stop recording on the recorder.
- Stop all recordings on the network disk recorder.
- Stop all playbacks.

Step 2

Turn off the power of the recorder.

Step 3

Turn off the power of the extension unit.

Important:
- Turn off the power of the extension unit after turning off the power of the recorder.

4 HDD unit

Handle the HDD units

To install a hard disk drive in the extension unit, it is necessary to assemble an HDD unit (encase the hard disk drive in the HDD canister).
The HDD unit is designed to easily install/remove the hard disk drive in/from the extension unit.
Contact your dealer about purchasing, installing, and replacing the hard disk drives.

Important:
- The HDD unit is a precision device. Handle them with care. Vibration and shocks may cause failure of the HDD unit.
- Before transportation, read "HDD unit holding bracket" (this page) and "When you transport the extension unit" (☞ Page 21).
- Do not move or install this product just after turning the power on or off (for around 30 seconds.) The hard disk drives are running.
- Install the HDD units in order starting with disk slot 1.
- Once the operation has started in RAID1*, RAID5* or RAID6* mode, do not change the position of the HDD unit. If they are changed, it may become impossible to read recorded data.
  * Refer to Operation/Settings of the Operating Instructions for RAID mode.

HDD unit holding bracket

The extension unit has the "HDD unit holding bracket" in the HDD unit slot, screwed in at the factory before shipment. To install the HDD unit in the extension unit, remove the "HDD unit holding bracket" first.
The "HDD unit holding bracket" and the screw for fixing the bracket are necessary to prevent the HDD unit from falling off during transportation. Keep them properly.

How to remove the HDD unit holding bracket

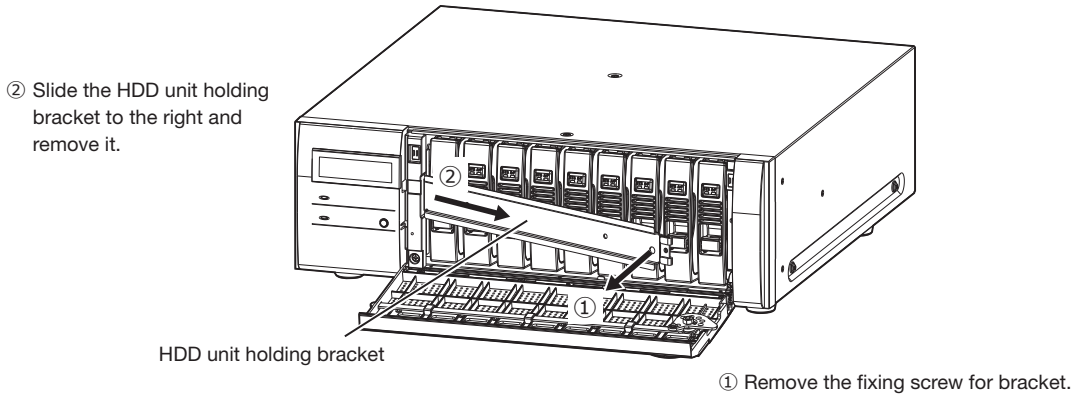

How to attach the HDD unit holding bracket

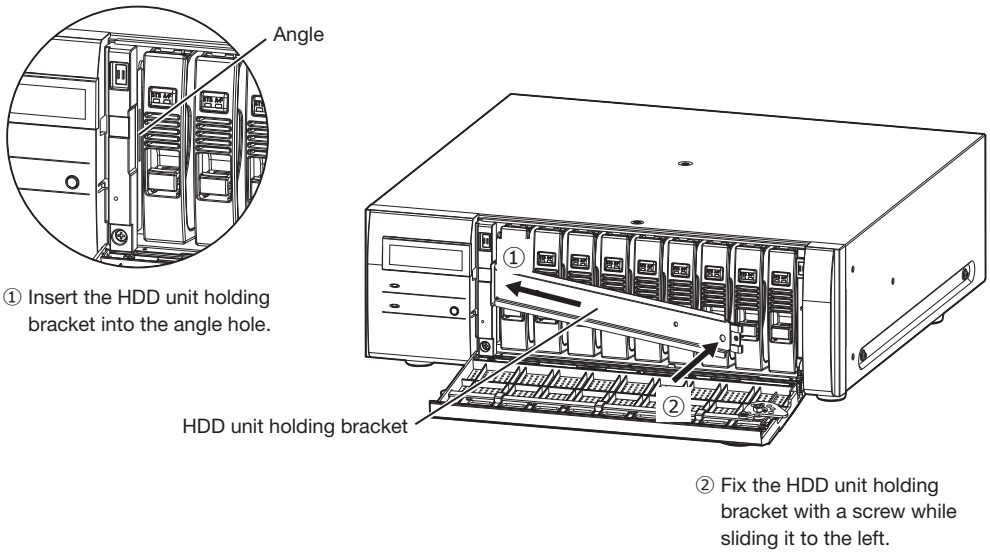

When you transport the extension unit

(1) Remove all the HDD units in the extension unit or fit the HDD unit holding brackets and fix them with screws.
(2) Put the extension unit between the cushions and insert together into the packing box.

Important:
- The extension unit weighs over 10 kg {22.1 lbs}. Be careful not to drop the product when transporting. Dropping may cause damage, deformation of the extension unit, or injury.

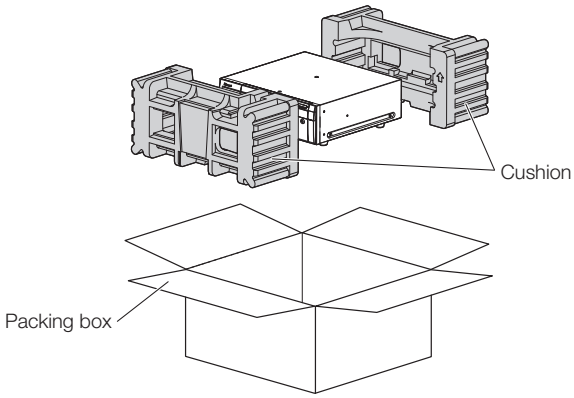

Assemble HDD unit

To install a hard disk drive in the recorder, it is necessary to assemble an HDD unit (encase the hard disk drive in the HDD canister).
The HDD unit is designed to easily install/remove the hard disk drive in/from the recorder.
Contact your dealer about purchasing, installing, and replacing the hard disk drives.

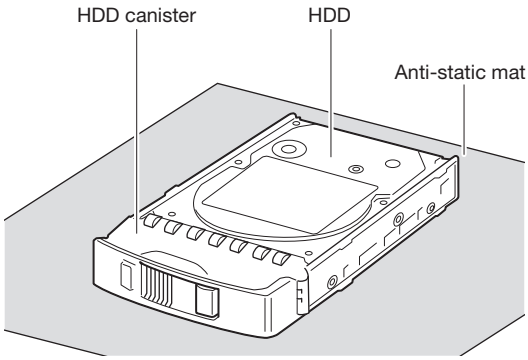

Important:

- Hard disk drives are precision devices. Before installing the hard disk drives, read the "Hard disk drive" section of Precautions in important information together with the following.
  - Before touching a hard disk drive, release static electricity from your body using an anti-static grounding strap, etc.
    Even after releasing static electricity, hold the side of the hard disk drive when carrying it. To prevent damage to the hard disk drive from static electricity, do not touch the circuit board and the connectors of the hard disk drive.
  - Use an anti-static mat and an anti-static grounding strap when installing/replacing the hard disk drives.
  - When installing hard disk drives, use a low-torque powered screwdriver or a torque screwdriver to tighten screws with the specified torque.

Step 1

Fix both sides of the hard disk drive with the dedicated HDD canister using the 4 provided screws for HDD canister installation.
Tightening torque for the screws: 0.49 N·m (5 kgf·cm) (use a low-torque powered screwdriver or a torque screwdriver)

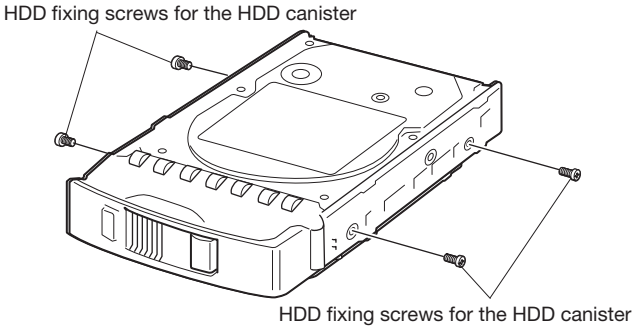

Step 2

Fix the bottom of the hard disk drive with the HDD canister using the 2 provided screws for HDD canister installation.
Tightening torque for the screws: 0.49 N·m (5 kgf·cm) (use a low-torque powered screwdriver or a torque screwdriver)

Important:

- To use 5TB, 6TB or more capacity of HDD in the future with HDD canister, please do not fix two provided screws into bottom side. Because the screw length is longer than depth of tapped hole of HDD.

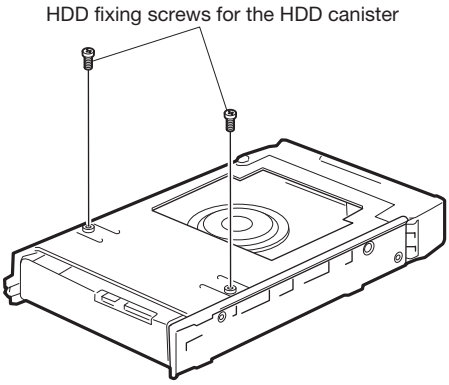

Install the HDD unit in extension unit

The illustration on this page is schematic. Details of the shape are omitted.
It is possible to install the HDD unit without stopping the operation (except when RAID1/RAID5 or RAID6 mode is in operation).
When the extension unit has the "HDD unit holding bracket" attached at the factory before shipment, remove it before STEP 2.

Step 1

After inserting the key (provided) into the key hole on the front cover, push and turn it to the right to open the front cover.

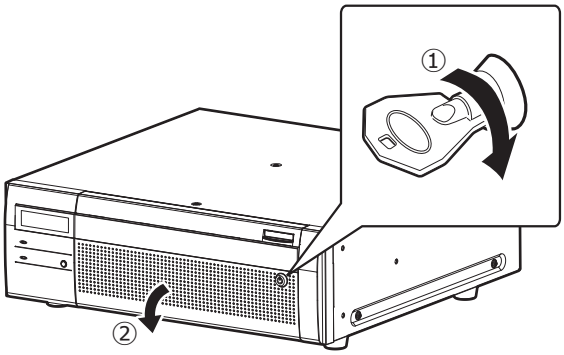

Step 2

Insert the HDD units into the HDD slots in order starting from HDD1.

① Lift up the lever on the HDD unit while holding down the removal knob, and then insert the HDD unit all the way into the HDD slot.
Insert the HDD unit carefully without knocking it against anything (and without knocking against HDD units which are already inserted).

② Push the upper part of the lever securely until it hits the protruding section at the back side of disk slot top and then turn down the lever.

③ The removal knob fits into position with a "click" sound when turning down the lever.

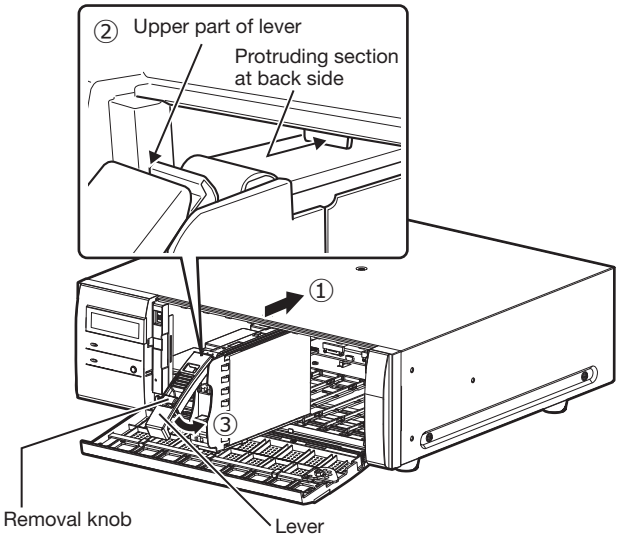

Important:
- Insert the HDD units in order from the disk slot number 1.
- When mounting the HDD unit, be careful not to pinch your fingers with the lever.

④ The following is displayed on the LCD of the corresponding recorder.

```
EXTx－y
NEW HDD DETECT
```

* x is a unit number, y is a slot number

LCD display

HDD operation mode and temperature of HDD unit are displayed at the first line of LCD.
The status of HDD unit is displayed at the second line of LCD.

In normal status	:No indication
During 1DOWN	: 1 DOWN
During 2DOWN	: 2 DOWN
During 3DOWN	: 3 DOWN
Waiting for RAID recovery start	: RCV START WAIT
RAID recovering	: RECOVERING cc% (cc: progress rate)
RAID recovering (verifying)	: VERIFYING cc% (cc: progress rate)

Remove the HDD units from extension unit

When removing the HDD unit, it is necessary to perform the removal process in advance. When replacing the HDD unit, it is necessary to perform the removal process/the link process.

Important:
- Consult the dealer for the removal process/removal and the link process/installation of the HDD unit.
- Once the installation process is completed, the data in the HDD unit is deleted.

After the removing process is completed, the HDD unit can be removed even if the extension unit is operating. The following explains procedures for how to remove the HDD unit after the removing process.

Step 1

After inserting the key (provided) into the key hole on the front cover, push and turn it to the right to open the front cover.

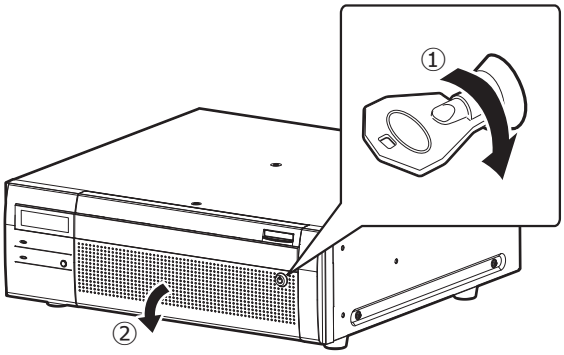

Step 2

Remove the HDD unit.

① Pull the lever up while holding down the removal knob on the HDD unit.

② Pull the HDD unit out from the HDD slot.
Pull the HDD unit out carefully so as not to drop it and handle it gently so as not to give it a shock or vibration.

Important:
- When removing the HDD unit, be careful not to pinch your fingers with the lever.

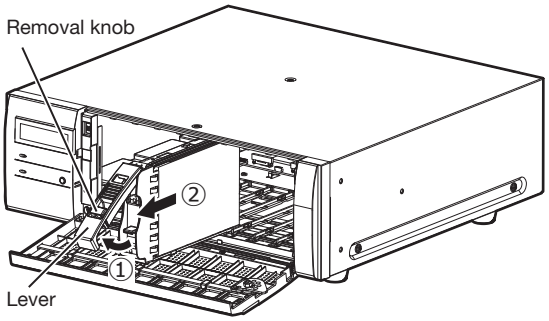

Step 3

Close the front cover and lock it by pushing and turning the key to the left.

Keep the key in a safe place.

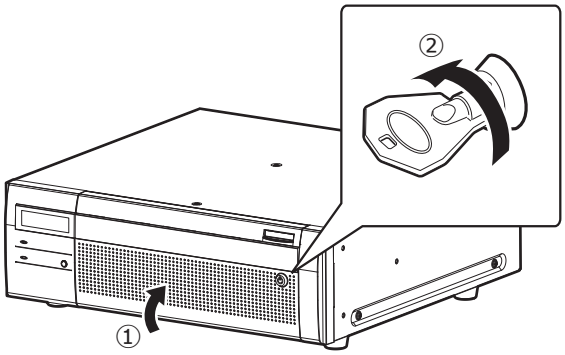

Remove the extension unit from recorder

When removing the extension unit, it is necessary to perform the removal process in advance. When replacing the extension unit, it is necessary to perform the removal process/the link process.

Important:
- Consult the dealer for the removal process/removal and the link process/installation of the extension unit.
- Once the installation process is completed, the data in the HDD units of the unit is deleted.

Troubleshooting

Before asking for repairs, check the symptoms with the following table.

Contact your dealer if a problem cannot be solved even after checking and trying the solution in the table or a problem is not described below.

Symptom	Cause/solution	Ref. pages
Power is not turned on.	• Is the power plug connected to the outlet firmly? Confirm the cable is firmly connected.	–
	• Check if the power cord is properly inserted into the power socket of the extension unit. Check if it is connected firmly.	13
The extension unit is not recognized.	• Make sure that the connection cable provided with the extension unit is being used.	–
	• Make sure that the connection cable is not loose.	–
	• Was the power of the extension unit turned on before turning on the power of the recorder? Reboot the system and turn on the power of the extension unit first.	19
	• When using a circuit breaker or equivalent device to turn on/off the power of the whole system at one time, make sure that all devices are connected to the same power source.	–
	• When using an UPS (uninterruptible power system), connect all devices to the same UPS.	
The hard disk drive is not recognized. The HDD status indicator does not light.	• Make sure that the HDD unit is inserted all the way into the HDD slot.	–
	• The hard disk drive is faulty.	–
The HDD access indicator is being lit red/blinking red.	• Make sure that the HDD units are installed in order from HDD1 to HDD9.	–
	• The respective HDD unit is faulty in the RAID1/RAID5 or RAID6 mode. RAID1: the HDD access indicator of the HDD unit in failure will light red. RAID5: the HDD access indicator of the first HDD unit to fail will light red. The HDD access indicator of the second HDD unit to fail will blink red. RAID6: the HDD access indicators of the first and second HDD unit to fail will light red. The HDD access indicator of the third HDD unit to fail will blink red.	12
Cannot recover data after replacing the HDD units in the RAID1/RAID5/RAID6 mode.	• Make sure that the HDD unit is inserted all the way into the HDD slot.	Installation Guide
	• The hard disk drive on which there is data to be recovered is faulty.	–
	• Check if the capacity of the new hard disk drive is smaller than the original one's.	–
The HDD access indicator blinks orange even when no recording or playback is being performed.	• Make sure that recovery of data in the RAID1/RAID5/RAID6 mode is not being processed.	–
The error indicator blinks red.	• A system error occurred. Contact your dealer.	–

Inspect the power cord, power plug and connectors periodically.

Symptom	Cause/solution	Ref. pages
The power cord insulation is damaged.	• The power cord, connector, or power plug is damaged. This may result in electric shock or a fire. Unplug the power plug from the AC outlet immediately, and refer to qualified service personnel.	–
The power cord, plug and connectors get hot during use.		
The power cord gets hot when bent or stretched.		

Specifications

• General

Power source:	WJ-HXE400: 120 V AC, 60 Hz WJ-HXE400/G: 220 V to 240 V AC, 50 Hz/60 Hz
Power consumption:	WJ-HXE400: 85 W (170 VA) WJ-HXE400/G: 85 W (175 VA)
Ambient operating temperature:	Main body: +5 °C - +45 °C {41 °F - 113 °F}
Ambient operating humidity:	5 % to 90 % (non condensing)
Maximum operating altitude:	2000 m {6562 feet} or less
Dimensions:	430 mm (W) × 132 mm (H) × 413 mm (D) (From Rack Mount Bracket 400 mm) {16-15/16 inches (W) × 5-3/16 inches (H) × 16-4/16 inches (D)} (excluding rubber feet and projections)
Mass:	When no HDD is installed: 11 kg {24.3 lbs} When 9 HDDs are installed: 19.5 kg {43.0 lbs}
Finish:	Front view: Solid metallic coating Top cover: Solid metallic coating Rear view: Galvanized treatment

• Hard disk drive (Contact your dealer about purchasing hard disk drives.)

Hard disk drive:	3.5 type hard disk drive x (Up to 9 hard disk drives can be installed.) RAID1 (Available only when 2 or more hard disk drives are installed.) RAID5 (Available only when 3 or more hard disk drives are installed.) RAID6 (Available only when 4 or more hard disk drives are installed.)

• Input/Output

External input connector (EXT IN):	High-speed serial interface, 5 Gbps (theoretical value), x1

Disposal of Old Equipment and Batteries
Only for European Union and countries with recycling systems

These symbols on the products, packaging, and/or accompanying documents mean that used electrical and electronic products and batteries must not be mixed with general household waste.
For proper treatment, recovery and recycling of old products and used batteries, please take them to applicable collection points in accordance with your national legislation.
By disposing of them correctly, you will help to save valuable resources and prevent any potential negative effects on human health and the environment.
For more information about collection and recycling, please contact your local municipality.
Penalties may be applicable for incorrect disposal of this waste, in accordance with national legislation.

Note for the battery symbol (bottom symbol)
This symbol might be used in combination with a chemical symbol. In this case it complies with the requirement set by the Directive for the chemical involved.

For U.S.A.

Disposal may be regulated in your community due to environmental considerations. For disposal or recycling information, please visit our website.

For U.S. and Canada:

i-PRO Americas Inc.
https://www.i-pro.com/

For Europe and other countries:

i-PRO Co., Ltd. Fukuoka, Japan
https://www.i-pro.com/

i-PRO EMEA B.V. UK Branch
1010 Cambourne Business Park,
Cambridgeshire CB23 6DP

Authorised Representative in EU:
i-PRO EMEA B.V.
Laarderhoogtweg 25, 1101 EB
Amsterdam, Netherlands

© i-PRO Co., Ltd. 2022

Ls1116-5042 PGQX2110UA Printed in China